Journal of
Risk and Financial Management

MDPI

Article

Predicting the Risk of Death for Cryptocurrencies Using Deep Learning

Doğa Elif Konuk * and Halil Altay Güvenir

Department of Computer Engineering, Bilkent University, 06800 Ankara, Türkiye; guvenir@cs.bilkent.edu.tr
* Correspondence: dogaelifkonuk@gmail.com

Abstract

The rapid rise in the popularity of cryptocurrencies has drawn increasing attention from investors, entrepreneurs, and the public in recent years. However, this rapid growth comes with risk: many coins fail early and become what are known as "dead coins", defined by a lack of recorded activity for more than a year. This study applies deep learning techniques to estimate the short-term risk of a cryptocurrency's death. Specifically, three Recurrent Neural Network architectures, Long Short-Term Memory (LSTM), Bidirectional LSTM (BiLSTM), and Gated Recurrent Unit (GRU), were trained on 18-month time series of daily closing prices and trading volumes using a stratified five-fold cross-validation framework. The models' predictive performances were compared across input windows ranging from 10 to 180 days. Using the previous 180 days of data as input, GRU achieved the highest point accuracy of 0.7134, whereas BiLSTM exhibited the best performance when evaluated across input sequence lengths varying from 10 to 180 days, reaching an average accuracy of 0.676. These findings show the ability of recurrent architectures to anticipate short-term failure risks in cryptocurrency markets. Theoretically, the study contributes to financial risk modeling by extending time series classification methods to cryptocurrency failure prediction. Practically, it provides investors and analysts with a data-driven early-warning tool to manage portfolio risk and reduce potential losses.

Keywords: LSTM; BiLSTM; GRU; cryptocurrency; time series classification; dead coins

check for updates

Academic Editors: Anna Maria D'Arcangelis and Giulia Rotundo

Received: 30 September 2025
Revised: 18 November 2025
Accepted: 30 November 2025
Published: 15 December 2025

Citation: Konuk, D. E., & Güvenir, H. A. (2025). Predicting the Risk of Death for Cryptocurrencies Using Deep Learning. *Journal of Risk and Financial Management*, *18*(12), 716. https://doi.org/10.3390/jrfm18120716

Copyright: © 2025 by the authors. Licensee MDPI, Basel, Switzerland. This article is an open access article distributed under the terms and conditions of the Creative Commons Attribution (CC BY) license (https://creativecommons.org/licenses/by/4.0/).

1. Introduction

In recent years, cryptocurrencies have gained popularity due to advantages such as enabling peer-to-peer transactions without intermediary financial institutions and providing secure and private financial transfers (Mirza et al., 2023). Since Bitcoin's introduction as a peer-to-peer electronic cash system by Nakamoto (2008), the market has expanded significantly, with CoinMarketCap tracking 18.67 million cryptocurrencies as of July 2025 (CoinMarketCap, 2025). One of the main reasons behind the popularity of cryptocurrencies is their potential to generate substantial long-term profit for investors. For example, Bitcoin's price has increased roughly tenfold over the last five years, despite experiencing periods of sharp volatility during that time (Edwards, 2025). As noted by some cryptocurrency supporters, investors also appreciate that cryptocurrencies eliminate the need for central banks to control the money supply, since such banks are often linked to inflation and a decline in money's value (Rosen, 2025).

Although cryptocurrencies can yield high returns, they are also highly susceptible to significant losses in value due to the fluctuating nature of the cryptocurrency market. For example, Bitcoin has seen significant collapses, losing 61% of its value in 2014, 73% in 2018,

and 64% in 2022, despite growing thousands of percent since its founding (Royal, 2025). More recently, the crypto market experienced a crash that wiped out over $19 billion in leveraged positions between 10 and 11 October 2025 (ArunKumar et al., 2025). During this crash, Bitcoin fell by roughly 13% from its all-time high of over $126,000, and the impact was even more severe for altcoins, since tokens such as Solana, Sui, and several memecoins lost more than 40% of their value within minutes.

Fluctuations in the value of a cryptocurrency may result from macroeconomic factors that influence the overall financial landscape, while they can also be affected by characteristic parameters of a coin, such as market activity, trading volume, closing price, opening price, and similar indicators. On the macroeconomic side, the classical supply–demand relationship plays a crucial role, as rising demand relative to a fixed supply can drive up the value of cryptocurrencies like Bitcoin (Rosen, 2025). Conversely, when supply is unlimited and demand falls, prices tend to decrease, and episodes of overselling or overbuying can create sharp market fluctuations (Tiao, 2025). Moreover, high interest rates might motivate investors to move their money from low-utility or speculative coins to safer assets, such as savings accounts. Similarly, during times of uncertainty, such as wars or economic crises, people tend to avoid risky financial moves, which can affect the cryptocurrency market. According to a case study, the start of the COVID-19 pandemic caused a crypto-rush, followed by an inverse trend as many investors left the market later (Jabotinsky & Sarel, 2023). In addition to these influences, attempts to interfere with the decentralized nature of cryptocurrencies, such as discussions about bringing regulations to the crypto market by the governments, can result in a decline in their value (Tiao, 2025).

Such events, triggering fluctuations in the market, can also result in the disappearance of certain cryptocurrencies from the market. Many other factors, such as the level of trust given to investors by the founder of a cryptocurrency, negative social media sentiments, or scandals, can lead to a rapid decline in a coin's trading volume. For example, a leading cryptocurrency exchange, FTX, crashed in November 2022 after it was revealed that its affiliate, Alameda Research, relied heavily on speculative tokens (Reiff, 2024). This led to the withdrawals of many customers and the bankruptcy of both companies, causing significant disruption in the cryptocurrency market. Aside from scams, cryptocurrencies that are created as jokes or memes often lose their validity due to lack of practicality, while legitimate coins can become dead coins due to insufficient funding, developer departure, or declining market interest (Ledger Academy, 2025).These examples illustrate that while cryptocurrencies can be highly profitable, they also expose investors to serious risks such as sharp market drops, unexpected regulatory decisions, and the possibility that a coin may become worthless.

A cryptocurrency that has lost almost all its value or is no longer usable is known as a "dead coin"(Ledger Academy, 2025). According to industry standards, cryptocurrencies are usually categorized as defunct or "dead" if their trading volume over three months is less than USD 1000 (Ledger Academy, 2025). Currently, there is not a formal definition of dead coins in the professional and academic literature (Fantazzini, 2022). Within the scope of this study, a dead coin is defined as a cryptocurrency with no activity within the past year. While there are many external factors affecting the value fluctuations and death of a cryptocurrency, these factors are hard to track and use for future predictions. On the other hand, quantitative parameters of a coin, categorized as time series data, can provide insights into whether the coin will continue to be traded or lose its value over time. These predictions can be useful for investors to manage their cryptocurrency portfolios and minimize potential losses.

In the context of time series, the goal of forecasting is to predict exact values, whereas classification assigns data to distinct categories based on its past behavior. Time Series

Classification (TSC) is the task of training a classifier with sequential time series data to learn a mapping from input sequences to a probability distribution over possible class labels (Fawaz et al., 2019). In many real-world scenarios, especially financial applications, classification of data can be more useful for decision-making than forecasting. This change in approach has led to the development of many TSC methods, particularly for use in finance.

This study places special emphasis on classifying time series data by predicting whether a cryptocurrency will become dead within the upcoming 10-day period. By analyzing the risk of cryptocurrencies' dying, investors can reduce potential losses and enhance their portfolio management strategies. The classifications were based solely on the coins' characteristics, specifically daily closing prices and trading volumes. We retrieved the time series data used in this study from Nomics[1].

Historically, TSC problems have been solved with various methodologies such as *k*-Nearest Neighbors (*k*-NN) and Dynamic Time Warping (DTW) (Abanda et al., 2019; Wang et al., 2018). In more recent years, machine learning and deep learning methodologies have surfaced, and they have been used for many time series forecasting and classification problems. Recurrent Neural Networks (RNNs) are particularly useful for capturing temporal patterns between data; hence, they are commonly used for sequential prediction problems (Tessoni & Amoretti, 2022). In a study comparing various machine learning and deep learning models for forecasting Bitcoin price trends, RNNs were found to outperform other architectures, highlighting their effectiveness for cryptocurrency-related prediction tasks (Goutte et al., 2023). Among them, the Long Short-Term Memory (LSTM) and Gated Recurrent Unit (GRU) models demonstrated particularly strong performance, further supporting their suitability for modeling financial time series data. Therefore, LSTM, GRU, and Bidirectional LSTM (BiLSTM) architectures, which are specific forms of RNNs, are selected in this study to assess their performance in predicting the risk of cryptocurrencies becoming dead coins.

The main objectives of this study can be summarized as follows:

- Creating variations of deep learning models using LSTM, GRU, and BiLSTM architectures by systematically altering the number of layers and units per layer to analyze their impact on predictive performance.
- Extending financial risk theory by framing cryptocurrency failure as a time series classification problem rather than a forecasting task, linking the concept of "death risk" to survival analysis perspectives within cryptocurrency markets.
- Training these models with time series data of trading volume and closing price values of cryptocurrencies to predict the risk of a coin becoming dead within the following 10 days and selecting the best-performing model for each architecture.
- Providing a data-driven warning system that helps investors and portfolio managers spot coins showing early signs of inactivity or collapse and offering timely information for safer risk-management and investment decisions in a highly volatile market.
- Improving methodological understanding by systematically comparing LSTM, GRU, and BiLSTM architectures under consistent experimental conditions and multiple historical input windows of 10 to 180 past days to evaluate how the length of past data influences the performance of predicting a coin's death risk within the following 10 days. The comparative results clarify how network depth, bidirectionality, and gating mechanisms influence performance when modeling financial time series with irregular activity patterns, providing guidance for applying deep learning to risk assessment in volatile markets such as cryptocurrencies and other emerging financial assets.

The remainder of this paper is organized as follows: Section 2 gives insights about the related workworks in the literature. Section 3 describes the dataset used in the study

and its related preprocessing steps along with deep learning architectures used in the experiments. Sections 4 and 5 outlines the details of the experiment procedure and analyzes the results. Finally, the study is concluded with Section 5, explaining theoretical and practical implications, limitations, and suggestions for future work.

2. Review of Literature

Data instances recorded sequentially over time are referred to as time series data, which consist of ordered data points that carry meaningful information (Fawaz et al., 2019). Recurrent Neural Networks (RNNs) are the most widely used machine deep learning models for sequential prediction problems (Tessoni & Amoretti, 2022). Within the family of RNNs, Long Short-Term Memory (LSTM) and Gated Recurrent Unit (GRU) architectures are widely used for modeling long-term dependencies in time series data, as they effectively address challenges such as vanishing gradients (Hochreiter & Schmidhuber, 1997). These architectures have become popular for time series forecasting applications due to their ability to capture complex temporal patterns. Financial forecasting is also a key area that benefits from historical financial time series data to predict trends in the market and provide strategical insights to investors and speculators (Tang et al., 2022). For instance, Fister et al. (2021) developed LSTM-based models for stock trading, achieving robust portfolio performance in the German financial market. Similarly, Sivadasan et al. (2024) trained LSTM and GRU networks using the technical indicators (TIs) and open, high, low, and close (OHLC) features of various stocks to predict the opening prices of the stocks for the following day. In this study, GRU achieved higher accuracy in most cases, reducing Mean Absolute Percentage Error (MAPE) to 0.62% for Google stock, compared to LSTM's 1.05%. Likewise, Lawi et al. (2022) constructed eight models with different preprocessing and regularization steps for forecasting the stock prices of the companies AMZN, GOOGL, BLL, and QCOM. Although the models showed competing performance, it was significant that the four models combined with GRU outperformed the other four models combined with LSTM on the stock prices of AMZN, GOOGL, BLL, and QCOM, with accuracies of 96.07%, 94.33%, 96.60%, and 95.38%, respectively.

Time series analysis can be applied to study cryptocurrency performance, and many studies already focus on forecasting their future values. Some of these studies propose hybrid deep learning approaches for cryptocurrency price prediction. For example, Patel et al. (2020) proposed a hybrid model combining LSTM and GRU to forecast Litecoin and Monero prices over the next 1, 3, and 7 days. Although the proposed model did not present an effective result for the next 7 days, it outperformed traditional LSTM by reducing the Mean Squared Error (MSE) from 194.4952 to 5.2838 for Litecoin and 230.9365 to 10.7031 for Monero for 1-day forecasts, demonstrating strong performance in short-term price prediction. In another research, Dip Das et al. (2024) integrated the encoder–decoder principle with LSTM and GRU along with multiple activation functions and hyperparameter tuning for trend predictions in the stock and cryptocurrency market. For various individual stocks, stock index S&P, and Bitcoin as a cryptocurrency, autoencoder–GRU (AE-GRU) architecture significantly outperformed autoencoder–LSTM (AE-LSTM) architecture, with a higher prediction accuracy. In particular, AE-GRU obtained 0.5% MAPE for Bitcoin trend prediction, which is half of the value found with AE-LSTM. In another study, four methods, including a convolutional neural network (CNN), hybrid CNN-LSTM network (CLSTM), multilayer perceptron (MLP), and radial basis function neural network (RBFNN), were compared to predict the trends of six cryptocurrencies, including Bitcoin, Dash, Ether, Litecoin, Monero, and Ripple, within the next minute using 18 technical indicators. For all cryptocurrencies, CLSTM outperformed other architectures, with an accuracy of 79.94% on Monero and 74.12% on Dash cryptocurrencies (Alonso-Monsalve et al., 2020).

In another study, Fleischer et al. (2022) examined the performance of LSTM in predicting the prices of Electro-Optical System (EOS), Bitcoin, Ethereum, and Dogecoin cryptocurrencies only using their historical closing prices. The results were compared to the ARIMA approach using the RMSE (Root Mean Squared Error) metric. LSTM outperformed ARIMA for all cryptocurrencies, showing a 72–73% reduction in RMSE for EOS and Dogecoin, which have greater fluctuations in their closing prices compared to Bitcoin and Ethereum, demonstrating that LSTM performs significantly well for highly volatile cryptocurrencies. In a comparative study, Seabe et al. (2023) implemented LSTM, GRU, and BiLSTM, trained on the daily closing prices of Bitcoin, Ethereum, and Litecoin cryptocurrencies in the last five years to forecast their prices. RMSE and the MAPE performance metrics were used to analyze the performance of the models, and BiLSTM surpassed other models with a MAPE value of 0.036 for Bitcoin, 0.124 for Ethereum, and 0.041 for Litecoin. In another study by Golnari et al. (2024), a probabilistic approach referred to as Probabilistic Gated Recurrent Unit (P-GRU) was proposed, incorporating stochasticity into the traditional GRU by enabling the model weights to have their distinct probability distributions in order to tackle the challenge coming from the volatile nature of cryptocurrencies, focusing on the prediction of Bitcoin prices. This novel method outperformed the other simple, time-distributed, and bidirectional variants of GRU and LSTM networks. The study was also expanded to predict the prices of six other cryptocurrencies by using transfer learning with the P-GRU model, contributing to the overall inquiry for cryptocurrency price prediction.

In line with our study, Özuysal et al. (2022) proposed a method for assessing the death risk of cryptocurrencies over 30, 60, 90, 120, and 150 days, based on their past 30-day data of closing prices and daily trading volumes. In this study, a simple RNN architecture was used for capturing temporal patterns in the data. The study showed that the probability of identifying dead cryptocurrencies increases with longer prediction windows, starting from roughly 37% for the prediction of death in the next 30 days, and reaching nearly 84% for the 150-day horizon. Building on this research, Sakinoğlu and Güvenir (2023) proposed and experimented with four different techniques for constructing training datasets for an LSTM model to predict whether a cryptocurrency will die within the next 30 days. However, from the investors' point of view, it is more valuable to estimate the risk in the near future. Building on these, our study applies special forms of RNNs to predict the death risk of cryptocurrencies in the following 10 days using varying number of input days. By providing short-term predictions, this approach may help protect investors from the risk of holding cryptocurrencies that are likely to fail rapidly.

3. Materials and Methods

The data preprocessing steps and methodology used are described in the following subsections.

3.1. Data Description and Preprocessing

The dataset[2] is composed of time series data for cryptocurrencies that died by 1 March 2023. We found 7312 such cryptocurrencies. According to our definition, the last transaction on these dead cryptocurrencies occurred before 1 March 2022. The dataset includes daily trading volume and closing price values for these cryptocurrencies, collected from a commercial data source.

Each cryptocurrency in the dataset spans a period longer than 18 months, including at least 180 days of trading activity followed by 12 months of complete inactivity. The 180-day portion represents the historical input window used for model training, while the subsequent inactive year verifies the classification of the coin as "dead". Hence, the total

available data for each coin exceeds the prediction horizon, and the labeling process remains temporally consistent.

Even though cryptocurrency markets operate continuously, some coins, especially the ones that are getting close to inactivity, show days where no transactions are recorded. As a result, there are missing entries in the dataset which reflects days without any trading activity. During preprocessing, missing volume values were set to zero and missing closing prices were replaced with the most recent available closing price.

In order to be used in the experiments, time series data for at least $2(d_p + d_f - 1)$ days are needed, where d_p is the number of past days and d_f is the number of future days. Only cryptocurrencies that have lived for at least 180 days, providing sufficient historical data to generate both positive and negative instances for the largest input window ($d_p = 180$), are included in the experiments; currencies with shorter lifespans are removed. In all experiments, $d_f = 10$, since we are interested in predicting if a cryptocurrency will die in the next 10 days. The d_p values we experimented with are 10, 20, 30, 60, 90, 120, 150, and 180. Since both the volume and closing price values have large differences among the cryptocurrencies, we applied z-score normalization to each volume and closing price data for each remaining cryptocurrency.

The problem is to estimate how accurately we can predict if a cryptocurrency will die in the next d_f days, given its time series data from the past d_p days. In preparing the dataset, we opt to have a balanced number of positively and negatively labeled time series data. A positive instance represents the time series data of a cryptocurrency that will live less than d_f days; similarly a negative instance represents the data of a cryptocurrency that will live d_f days or more. Given the time series data for a cryptocurrency, d_f positive (P-labeled) and the same number of negative (N-labeled) instances are created, as shown in Figure 1. Each instance consists of the time series data with a length of d_p days. Positive instances are formed from the last d_f days, while negative instances are randomly selected from the previous days.

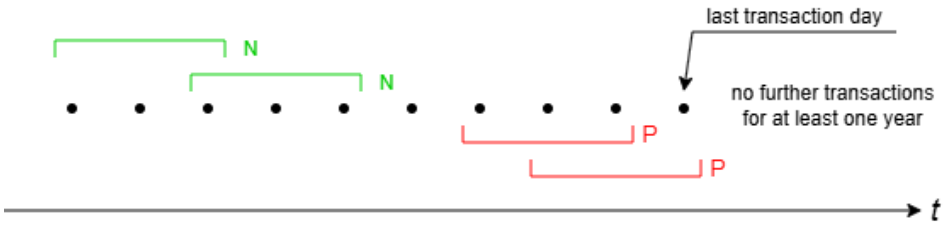

Figure 1. Creation of negative and positive instances from the time series data of 10 days ($d_p = 3$, $df = 2$). Each dot represents a day. When $d_f = 2$, two positive and two negative instances are constructed. Each data point is three days long.

The number of cryptocurrencies with sufficient data and the number of instances created for each experiment are shown in Table 1.

Table 1. Data size for each experiment (d_p: length of past data, # cryptocurrencies: number of cryptocurrencies with sufficient data, and # instances: number of instances created, for $d_f = 10$).

d_p	10	20	30	60	90	120	150	180
# cryptocurrencies	4540	4338	4109	3422	2904	2442	2128	1804
# instances	18,160	17,360	16,440	13,700	11,620	9780	8520	7220

3.2. Methodology

Three specialized RNN architectures, LSTM, BiLSTM, and GRU, were used in this study. Their respective model structures are explained in detail in the following subsections.

3.2.1. Long Short-Term Memory (LSTM)

LSTM is a type of RNN, addressing the vanishing gradient problem of conventional RNNs. The architecture of the LSTM cell is displayed in Figure 2. The diagram highlights how the architecture preserves long-term dependencies (Ingolfsson, 2021). The forget gate f_t selectively removes data that are no longer relevant in the cell state by applying a sigmoid function to the current input x_t and the previous hidden state h_{t-1}. Outputs near 0 lead to forgetting, while values near 1 retain information. The input gate i_t adds new information to the cell state by first applying a sigmoid function to X_t and h_{t-1}, determining which values to update. It uses a sigmoid function to filter relevant information and combines it with a candidate vector generated via tanh to update the memory. The final cell state update C_t is computed by the following equations:

$$f_t = \sigma(W_f X_t + U_f h_{t-1} + b_f) \quad \text{(Forget gate)} \tag{1}$$

$$i_t = \sigma(W_i X_t + U_i h_{t-1} + b_i) \quad \text{(Input gate)} \tag{2}$$

$$\hat{C}_t = \tanh(W_C X_t + U_C h_{t-1} + b_C) \quad \text{(Candidate cell state)} \tag{3}$$

$$C_t = f_t \odot C_{t-1} + i_t \odot \hat{C}_t \quad \text{(Cell state update)} \tag{4}$$

where W_*, U_*, b_* are learned parameters (weights and biases).

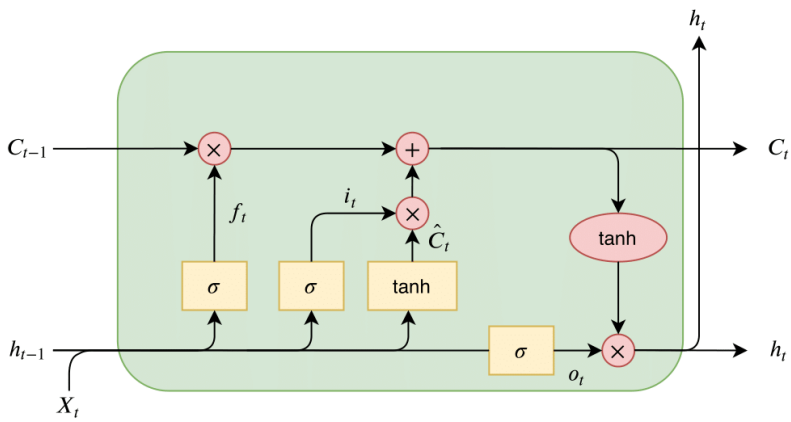

Figure 2. Structure of an LSTM {cell showing the flow of information through forget, input, and output gates. The diagram highlights how the architecture preserves long-term dependencies (Ingolfsson, 2021).

The output gate o_t determines what information from the cell state is passed on as output. It applies a tanh function to the cell state and filters the result using a sigmoid gate based on x_t and h_{t-1} using the following equations:

$$o_t = \sigma(W_o X_t + U_o h_{t-1} + b_o) \quad \text{(Output gate)} \tag{5}$$

$$h_t = o_t \odot \tanh(C_t) \quad \text{(Hidden state output)} \tag{6}$$

3.2.2. Bidirectional LSTM (BiLSTM)

Bidirectional Long Short-Term Memory, or BiLSTM, is a powerful RNN that can process sequences both forward and backward. It improves performance on tasks containing sequential data by capturing both past and future contexts through the use of two distinct LSTM layers, one for each direction. BiLSTM architecture is illustrated in Figure 3. This

bidirectional design enables the model to learn contextual information from previous and future time steps simultaneously (Naik & Jaidhar, 2022).

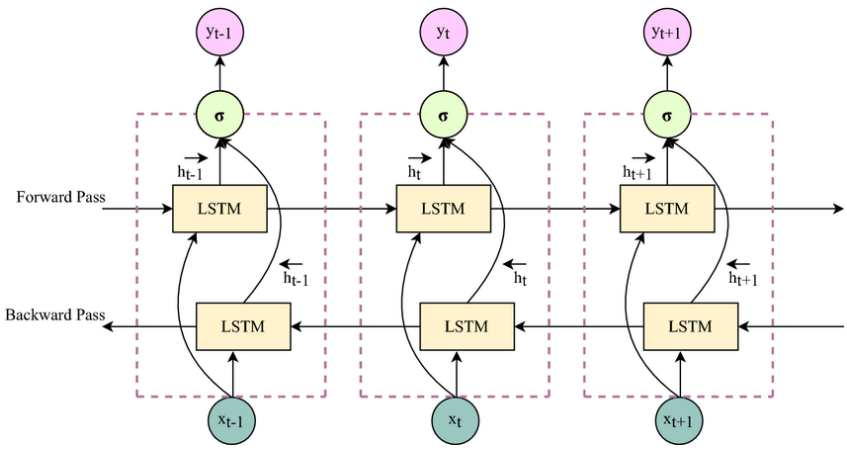

Figure 3. BiLSTM Architecture of a BiLSTM network that processes input sequences in both forward and backward directions. This bidirectional design enables the model to learn contextual information from previous and future time steps simultaneously (Naik & Jaidhar, 2022).

3.2.3. Gated Recurrent Unit (GRU)

GRU is a type of RNN designed to capture temporal dependencies in sequential data while using a simplified gating mechanism compared to LSTM. The architecture of the GRU cell is depicted in Figure 4. GRU The figure shows how GRU simplifies the LSTM architecture while retaining the ability to capture temporal dependencies (Huang et al., 2019). GRU updates its hidden state based on the current input x_t and the previous hidden state h_{t-1}, processing sequential data one element at a time. Using these elements, a candidate activation vector $\tilde{h}_t$ is calculated at each time step. The hidden state is then updated for the following time step using this candidate vector.

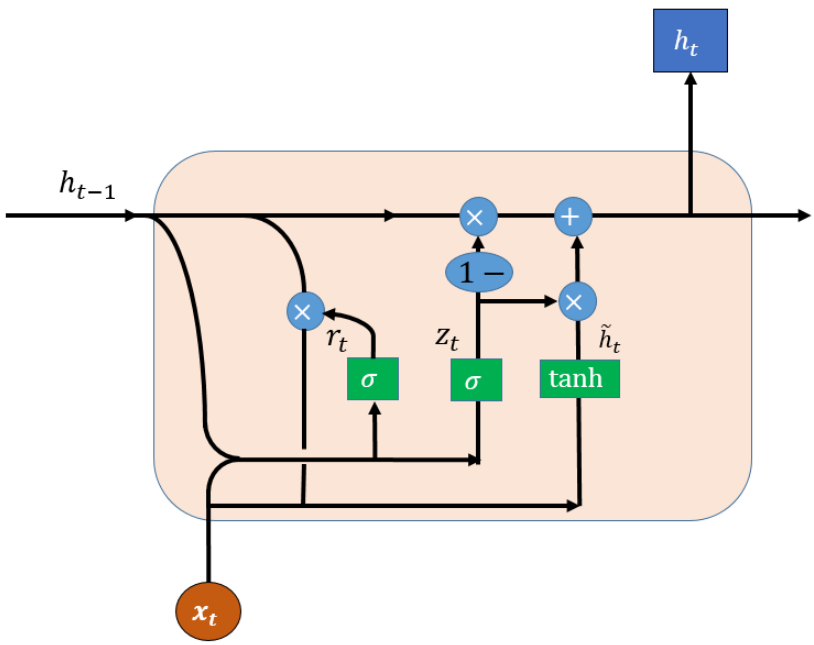

Figure 4. Structure of a GRU Cellcell, including reset and update gates. The figure shows how GRU simplifies the LSTM architecture while retaining the ability to capture temporal dependencies (Huang et al., 2019).

Candidate activation vector $\tilde{h}_t$ is computed using the update gate z_t and the reset gate r_t. The update gate balances the contribution of the candidate vector and the previous hidden state h_{t-1}, while the reset gate determines how much of the old hidden state to forget. Final hidden state h_t is calculated using the following equations:

$$r_t = \sigma(W_r x_t + U_r h_{t-1}) \quad \text{(Reset gate)} \tag{7}$$

$$z_t = \sigma(W_z x_t + U_z h_{t-1}) \quad \text{(Update gate)} \tag{8}$$

$$\tilde{h}_t = \tanh(W_h x_t + U_h(r_t \odot h_{t-1})) \quad \text{(Candidate hidden state)} \tag{9}$$

$$h_t = (1 - z_t) \odot h_{t-1} + z_t \odot \tilde{h}_t \quad \text{(Final hidden state)} \tag{10}$$

where W_*, U_* are learned parameters (weights and biases).

4. Experiments and Results

The evaluation procedure employed stratified five-fold cross-validation to ensure balanced representation of both active and dead coins in each fold. In each run, four folds were used for training and one for testing, and this process was repeated five times. The reported accuracy and AUC values are the averages across the five folds. All models were trained and evaluated on the same cross-validation splits to allow direct performance comparison. Standard deviations of the cross-validated accuracies were computed to assess the consistency of results.

For each of the LSTM, BiLSTM, and GRU experiments, we used 500 training epochs, a batch size of 64, and a validation split of 0.2. The number of layers and units per layer varied to find the highest accuracy for each model. To avoid overfitting, early stopping with a patience of 50 was applied based on validation accuracy, dropout layers with a rate of 0.2 and L2 weight regularization were used, and model selection was performed according to validation rather than training performance. For each combination of the number of layers and units per layer, the number of days used as input was varied with the following values $D = \{10, 20, 30, 60, 90, 120, 150, 180\}$. The performance of the models was evaluated using the average accuracy values across validation steps. $ACC(d)$ and $AUC(d)$ represent the accuracy and Area Under Curve obtained for d number of days used in training, respectively. AUC was calculated to assess the model's ability to rank cryptocurrencies according to their likelihood of dying. To investigate overall performance across varying input lengths, the average accuracy and average AUC across all input window sizes were computed for each combination of layer and unit configurations as in the following equations:

$$\text{Avg_ACC} = \frac{1}{|D|} \sum_{d \in D} \text{ACC}(d)$$

$$\text{Avg_AUC} = \frac{1}{|D|} \sum_{d \in D} \text{AUC}(d)$$

These metrics form the fundamental basis for comparing model performance.

4.1. LSTM

For LSTM, a total of ten different combinations of layer and unit per layer configurations were tested, and the best-performing ones out of these configurations are presented in Table 2. The highest accuracy and overall AUC values in the table are shown in bold. Each entry represents the mean ± standard deviation of the evaluation metrics obtained from the five-fold stratified cross-validation procedure. The relatively small standard deviations (typically below ±0.02) confirm the stability of the LSTM models across folds. The highest accuracy of 0.7018 was achieved with four layers and 64 units. Although it yielded the

highest point accuracy, the corresponding accuracy curve exhibited significant fluctuations, which led to a lower overall AUC value compared to other configurations. Meanwhile, the highest overall AUC of 0.7689 was obtained with one layer and 32 units.

Table 2. Highest performing number of layer and unit combinations of LSTM.

Layers	Units	Past Days	F1-Score	Accuracy	Overall AUC
1	32	180	0.7345 ± 0.004	0.6995 ± 0.014	**0.7689 ± 0.016**
1	64	180	0.7336 ± 0.006	0.6970 ± 0.011	0.7679 ± 0.012
2	32	180	0.7358 ± 0.013	0.7005 ± 0.013	0.7647 ± 0.014
4	64	150	0.7309 ± 0.014	**0.7018 ± 0.015**	0.7615 ± 0.018

The accuracy curves of different numbers of layers and units are displayed in Figure 5. The figure shows how accuracy generally increases with longer historical windows but varies by number of layers and number of units per layer. As illustrated, an accuracy of approximately 0.63 was achieved using a 10-day historical window. As the window size gradually increased up to 180 days, a general upward trend in accuracy was observed. The performance of the LSTM architecture is notably influenced by the number of layers and units, which leads to distinct characteristics in the resulting accuracy curves. The configuration with four layers and 64 units per layer achieved the highest accuracy of 0.7018; however, the corresponding curve exhibited a substantial drop around the 120-day mark, indicating potential instability. To reduce the impact of such an instability and to evaluate overall performance across varying historical window sizes, the average accuracy was calculated. The LSTM configuration with four layers, each containing 32 units, achieved the best accuracy, Avg_ACC = 0.6701, and the highest AUC, Avg_AUC = 0.7293, making it the best-performing LSTM network across varying numbers of past training days.

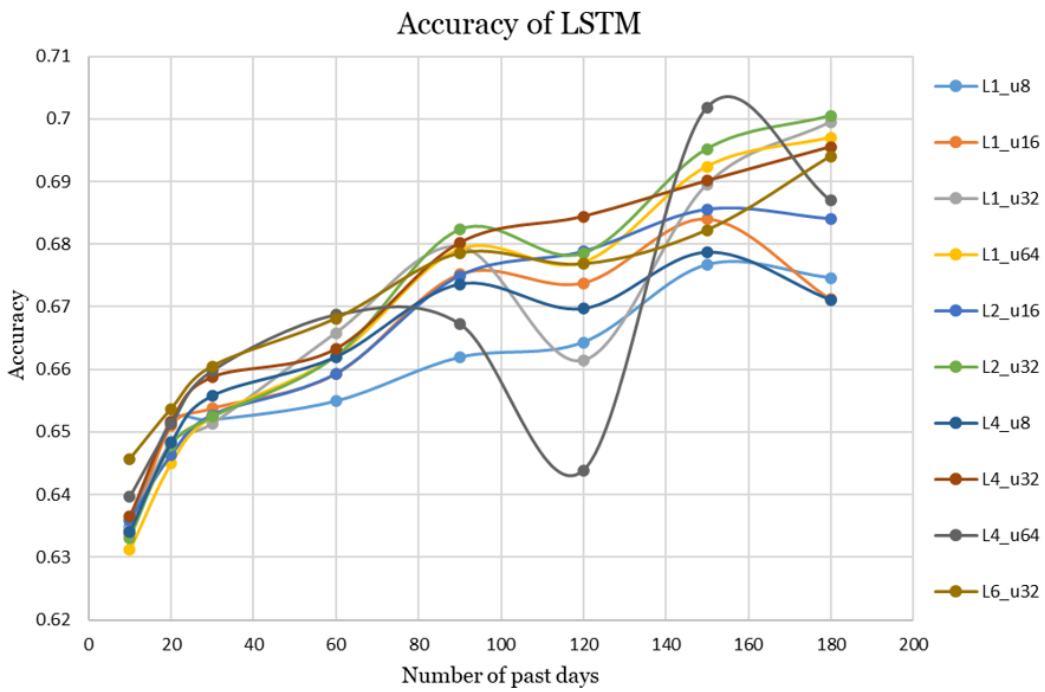

Figure 5. Accuracy curves of the LSTM network for different layer and configurations (L*n*_u*m*, in which *n* and *m* are the number of layers and units per layer, respectively).

4.2. GRU

For GRU configurations, a single-layer architecture was tested with a different number of units per layer, ranging from 8 to 176. The highest accuracy values from these con-

figurations were achieved by the mid-range configurations. These values are shown in Table 3. Each result shows the mean ± standard deviation of the evaluation metrics obtained through the five-fold stratified cross-validation. The GRU models exhibited slightly higher stability across folds, with standard deviations lower than 0.011 compared to values up to 0.018 for the LSTM models. The configuration with 96 units gave the highest values for both accuracy and overall AUC, which are 0.7134 and 0.7817, respectively.

Table 3. Highest performing number of Layer and unit combinations of GRU.

Layers	Units	Past Days	F1-Score	Accuracy	Overall AUC
1	64	180	0.7391 ± 0.003	0.7076 ± 0.011	0.7750 ± 0.009
1	80	180	0.7411 ± 0.004	0.7111 ± 0.006	0.7779 ± 0.003
1	96	180	0.7438 ± 0.004	**0.7134 ± 0.011**	**0.7817 ± 0.008**
1	128	180	0.7441 ± 0.006	0.7087 ± 0.010	0.7786 ± 0.009

Among the multi-layer GRU configurations, only the two-layer and four-layer setups with 32 units per layer were included in the final graph, as they outperformed other multi-layer GRU variants. However, increasing the number of layers did not improve the performance of the GRU, as the highest accuracy values were consistently achieved with single-layer architectures, as shown in Table 3. The accuracy curves of all the GRU architectures considered are illustrated in Figure 6. The figure illustrates the gradual improvement in accuracy with longer input windows. The curves exhibited minor fluctuations, indicating a near-linear trend in accuracy rising from approximately 0.63 to 0.71. The single-layer configuration with 96 units per layer achieved the highest accuracy of Avg_ACC = 0.6759, along with the highest AUC of Avg_AUC = 0.7385 across all varying past training days.

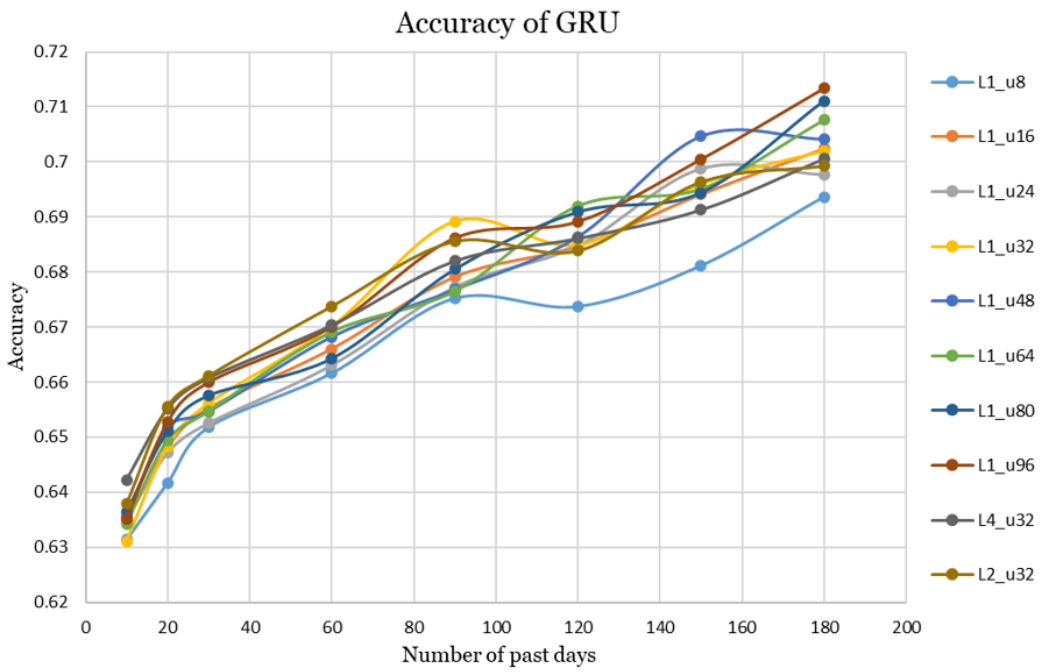

Figure 6. Accuracy curves of GRU network with varying number of layers and units per layer.

4.3. BiLSTM

For BiLSTM configurations, four variants were evaluated, which are one-layer with averaged hidden states, two-layer with averaged hidden states, one-layer with concatenated hidden states, and two-layer with concatenated hidden states, respectively. Among these,

the two-layer averaged configuration achieved the highest average accuracy; hence its results are presented in the analysis.

The BiLSTM experiments included a two-layer architecture evaluated with 12 different numbers of units per layer, ranging from 8 to 176. In addition, a four-layer configuration with 32 units per layer was tested based on the promising results observed in the LSTM experiments. However, this setup did not yield the best performance for BiLSTM. The highest accuracy values obtained for BiLSTM are presented in Table 4. Reporting the mean ± standard deviation from the five-fold stratified cross-validation, the results showed that the BiLSTM models also achieved consistent performance, with standard deviations consistently lower than ±0.02. The configuration with 80 units per layer achieved the highest point accuracy of 0.7098, whereas the configuration with 112 units per layer yielded the highest overall AUC of 0.7801. Both results were obtained using 180 past days as input.

Table 4. Highest performing number of layer and unit combinations of BiLSTM.

Layers	Units	Past Days	F1-Score	Accuracy	Overall AUC
2	80	180	0.7427 ± 0.011	**0.7098 ± 0.018**	0.7792 ± 0.015
2	96	180	0.7369 ± 0.008	0.7063 ± 0.014	0.7758 ± 0.012
2	112	180	0.7449 ± 0.004	0.7082 ± 0.013	**0.7801 ± 0.010**
2	176	180	0.7397 ± 0.005	0.7042 ± 0.009	0.7765 ± 0.012

The accuracy curves for all tested BiLSTM configurations are presented in Figure 7 to illustrate their comparative performance across varying historical window sizes. The results show overall improvement with longer historical windows and strong performance from several two-layer architectures.The best-performing configuration based on the average accuracy and AUC values for varying past training days was the two-layer BilSTM with 112 units per layer. This configuration achieved an accuracy of Avg_ACC = 0.676 and AUC of Avg_AUC = 0.7377. The remaining configurations produced closely comparable results.

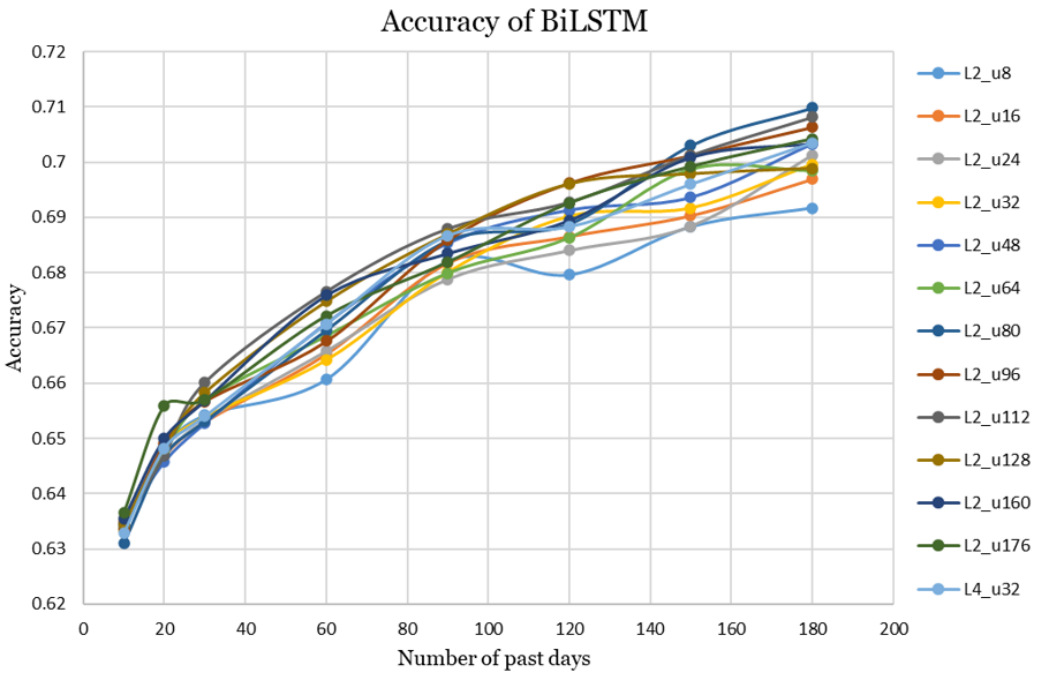

Figure 7. Accuracy of BiLSTM models across different layer–unit configurations and input windows.

4.4. Performance Summary

The best-performing configurations of LSTM, GRU, and BiLSTM are illustrated in Figure 8. Overall, all architectures exhibit an upward trend in accuracy, increasing from approximately 0.63 to 0.71 as the number of past days increases.The figure summarizes how all architectures achieve increasing accuracy with longer input histories, with BiLSTM slightly outperforming the others on average.

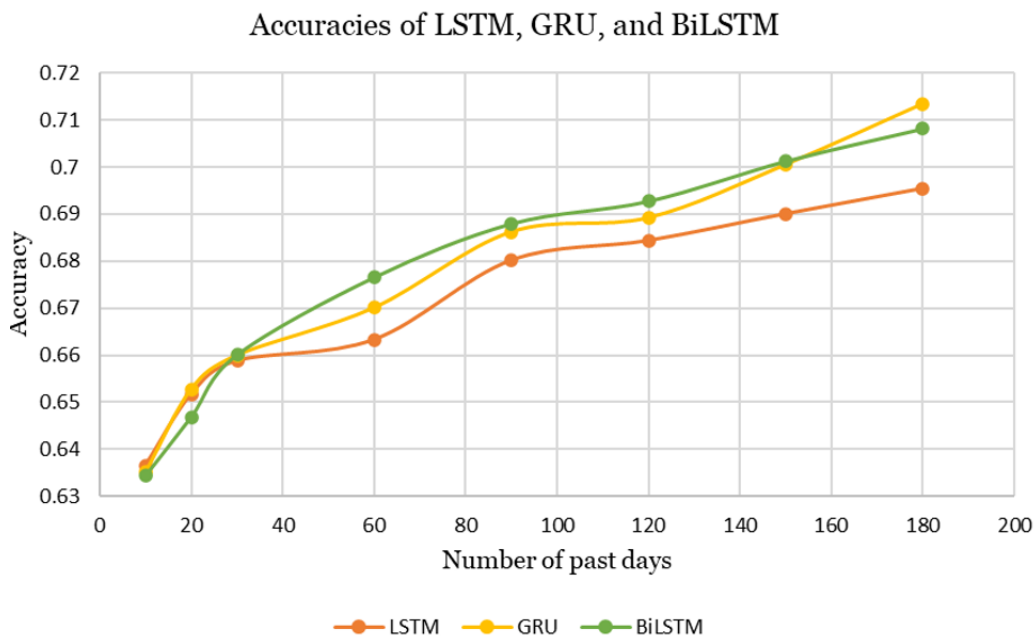

Figure 8. Final performance comparison of LSTM, GRU, and BiLSTM models.The figure summarizes how all architectures achieve increasing accuracy with longer input histories, with BiLSTM slightly outperforming the others on average.

The average accuracy and AUC values for the best-performing configurations of LSTM, GRU, and BiLSTM are summarized in Table 5. Based on these metrics, BiLSTM slightly outperformed the other models in terms of accuracy across varying number of past training days.

Table 5. Final performance comparison of LSTM, GRU, and BiLSTM.

Architecture	Avg_Accuracy	Avg_AUC
LSTM	0.6701	0.7293
GRU	0.6759	**0.7385**
BiLSTM	**0.676**	0.7377

5. Conclusions

This study examined how recurrent deep learning architectures can be used to estimate the short-term failure risk of cryptocurrencies. By analyzing daily closing prices and trading volumes of more than seven thousand coins, three models, LSTM, GRU, and BiLSTM, were evaluated with accuracy as the primary evaluation metric. The models produced similar accuracy values overall. However, LSTM exhibited the lowest accuracy and the most fluctuating performance among the experiments. On the other hand, GRU achieved the highest point accuracy of 0.7134 with a 180-day input window, while BiLSTM demonstrated the best overall performance across varying input lengths with an average accuracy of 0.676. These findings demonstrate that Recurrent Neural Networks can capture temporal dependencies in cryptocurrency data and provide reliable early-warning signals for potential

failures. The conclusions of the study are discussed under three perspectives: theoretical implications, practical implications, and research limitations with future directions.

5.1. Theoretical Implications

The death of a cryptocurrency can be influenced by two distinct categories of factors: intrinsic characteristics of the coin itself, such as closing price, trading volume, and market activity, and external macroeconomic conditions that shape the broader financial environment. This study contributes to the theoretical literature by reframing cryptocurrency failure prediction as a time-series classification problem, extending survival-analysis concepts into the digital-asset domain. The comparative evaluation of LSTM, GRU, and BiLSTM architectures enhances understanding of how recurrent neural networks model nonlinear dependencies and volatility in financial data. For all three models, accuracy improved as the number of past days used as input increased, showing that having more historical data makes the predictions more reliable. The models produced similar accuracy values overall. However, LSTM exhibited the lowest accuracy and the most fluctuating performance between the experiments. On the other hand, GRU achieved the highest point accuracy of 0.7134 with a 180-day input window, while BiLSTM demonstrated the best overall performance across varying input lengths. Furthermore, no clear correlation was observed between the number of layers and the number of units per layer for any of the models. The optimal model configuration can be identified through exploration of various architecture combinations. These observations strengthen theoretical knowledge of RNNs and validate their relevance to financial risk modeling.

5.2. Practical Implications

From a practical standpoint, the models developed in this study provide a data-driven early-warning framework for investors, portfolio managers, and exchanges. Overall, our findings suggest that it is possible to predict that a cryptocurrency will die in the next 10 days with roughly 70% accuracy by analyzing its performance over the last six months. This window provides investors with sufficient time to assess risk and sell the cryptocurrency they hold before a potential failure, allowing early liquidation of vulnerable assets. The system can also help cryptocurrency exchanges and regulators identify coins that are becoming risky or difficult to trade. Although cryptocurrencies lack formal redemption mechanisms, sudden spikes in trading volume often resemble a digital version of a "bank run" behavior, signaling potential collapse. Detecting such patterns can guide risk management in highly volatile crypto markets.

5.3. Research Limitations and Future Work

Despite promising results, the study has several limitations that point to future research opportunities. Although macroeconomic factors may influence the death of a cryptocurrency, many are difficult to track or quantify due to limited data availability. This constraint represents a limitation of the present study, which therefore focuses on closing prices and trading volumes, as they are more consistent and accessible for cryptocurrencies.

There are several different definitions for the death of a cryptocurrency (Fantazzini, 2022). We chose the definition as transaction inactivity for at least one year. This is the limitation of this work based on the definition of dead cryptocurrency. As long as the time series data about the daily transactions for a cryptocurrency can be converted into positive and negative labeled time series instances, the methodology used in this study can be applied to any definition of dead cryptocurrencies.

Incorporating factors such as sentiments of investors, developer activity, and regulatory announcements could improve model robustness. Furthermore, experimenting with historical windows longer than 180 days and training the models with a larger number of

cryptocurrencies may enhance generalizability and better capture long-term trends in a cryptocurrency's behavior. Future work may also investigate, hybrid architectures that combine LSTM, GRU, and BiLSTM components to potentially achieve improved predictive performance. Although the models in this study were treated as predictive black boxes, understanding their decision process is an important future goal. The predictions are driven by temporal patterns in closing prices and trading volumes, yet the specific contributions of these variables were not analyzed in detail. Future research will focus on incorporating explainable AI methods such as SHAP values, attention visualization, or gradient-based attributions to show which time-based patterns have the strongest impact on the model's predictions. Finally, early liquidity withdrawals or redemption-like signals could be found by examining transaction-level or on-chain data, connecting theoretical models with real market activity.

Author Contributions: Conceptualization, H.A.G.; methodology, D.E.K. and H.A.G.; software, D.E.K.; validation, H.A.G.; formal analysis, H.A.G.; investigation, D.E.K.; resources, D.E.K.; data curation, H.A.G.; writing—original draft preparation, D.E.K.; writing—review and editing, H.A.G.; visualization, D.E.K.; supervision, H.A.G.; project administration, H.A.G. All authors have read and agreed to the published version of the manuscript.

Funding: This research received no external funding.

Data Availability Statement: Data will be made available on request.

Acknowledgments: During the preparation of this manuscript/study, the author(s) used [ChatGPT, 4] for the purposes of formatting citation references, finding grammatical mistakes, and checking coherence and flow. The authors have reviewed and edited the output and take full responsibility for the content of this publication.

Conflicts of Interest: The authors declare no conflicts of interest. The funders had no role in the design of the study; in the collection, analyses, or interpretation of data; in the writing of the manuscript; or in the decision to publish the results.

Abbreviations

The following abbreviations are used in this manuscript:

LSTM	Long Short-Term Memory
BiLSTM	Bidirectional Long Short-Term Memory
GRU	Gated Recurrent Unit
RNN	Recurrent Neural Network
ACC	Accuracy
AUC	Area Under Curve

Notes

1 https://nomics.com/. Developer of a crypto application programming interface designed to permit cryptocurrency trading. The company sunset their API product on 31 March 2023.

2 Data will be made available on request.

References

Abanda, A., Mori, U., & Lozano, J. A. (2019). A review on distance based time series classification. *Data Mining and Knowledge Discovery*, *33*(2), 378–412. [CrossRef]

Alonso-Monsalve, S., Suárez-Cetrulo, A. L., Cervantes, A., & Quintana, D. (2020). Convolution on neural networks for high-frequency trend prediction of cryptocurrency exchange rates using technical indicators. *Expert Systems with Applications*, *149*, 113250. [CrossRef]

ArunKumar, K. E., Kalaga, D. V., Kumar, C. M. S., Chilkoor, G., Kawaji, M., & Brenza, T. M. (2025). Forecasting the dynamics of cumulative COVID-19 cases (confirmed, recovered and deaths) for top-16 countries using statistical machine learning models: Auto-Regressive Integrated Moving Average (ARIMA) and Seasonal Auto-Regressive Integrated Moving Average (SARIMA). *Applied Soft Computing*, *103*, 107161. [CrossRef]

CoinMarketCap. (2025). *Cryptocurrencies tracked by CoinMarketCap*. CoinMarketCap Charts. Available online: https://coinmarketcap.com/charts/number-of-cryptocurrencies-tracked/ (accessed on 21 July 2025).

Dip Das, J., Thulasiram, R. K., Henry, C., & Thavaneswaran, A. (2024). Encoder–Decoder based LSTM and GRU architectures for stocks and cryptocurrency prediction. *Journal of Risk and Financial Management*, *17*(5), 200. [CrossRef]

Edwards, J. (2025). *Bitcoin's price history*. Investopedia. Retrieved 21 July 2025. Available online: https://www.investopedia.com/articles/forex/121815/bitcoins-price-history.asp (accessed on 29 November 2025).

Fantazzini, D. (2022). Bitcoin's price history Crypto-coins and credit risk: Modelling and forecasting their probability of death. *Journal of Risk and Financial Management*, *15*(7), 304. [CrossRef]

Fawaz, H. I., Forestier, G., Weber, J., Idoumghar, L., & Muller, P.-A. (2019). Deep learning for time series classification: A review. *Data Mining and Knowledge Discovery*, *33*(4), 917–963. [CrossRef]

Fister, D., Perc, M., & Jagrič, T. (2021). Two robust long short-term memory frameworks for trading stocks. *Applied Intelligence*, *51*(7), 7177–7195. [CrossRef]

Fleischer, J. P., von Laszewski, G., Theran, C., & Parra Bautista, Y. J. (2022). Time series analysis of cryptocurrency prices using long short-term memory. *Algorithms*, *15*(7), 230. [CrossRef]

Golnari, A., Komeili, M. H., & Azizi, Z. (2024). Probabilistic deep learning and transfer learning for robust cryptocurrency price prediction. *Expert Systems with Applications*, *255*, 124404. [CrossRef]

Goutte, S., Le, H.-V., Liu, F., & von Mettenheim, H.-J. (2023). Deep learning and technical analysis in cryptocurrency market. *Finance Research Letters*, *54*, 103809. [CrossRef]

Hochreiter, S., & Schmidhuber, J. (1997). Long short-term memory. *Neural Computation*, *9*(8), 1735–1780. [CrossRef]

Huang, Z., Yang, F., Xu, F., Song, X., & Tsui, K.-L. (2019). Convolutional gated recurrent unit–recurrent neural network for state-of-charge estimation of lithium-ion batteries. *IEEE Access*, *7*, 93139–93149. [CrossRef]

Ingolfsson, T. M. (2021). *Insights into LSTM architecture*. Available online: https://thorirmar.com/post/insight_into_lstm/ (accessed on 22 June 2025). [CrossRef]

Jabotinsky, H. Y., & Sarel, R. (2023). How crisis affects crypto: Coronavirus as a test case. *UC Law SF Law Review*, *74*(2), 433. Available online: https://repository.uclawsf.edu/hastings_law_journal/vol74/iss2/6 (accessed on 21 July 2025).

Lawi, A., Mesra, H., & Amir, S. (2022). Implementation of long short-term memory and gated recurrent units on grouped time-series data to predict stock prices accurately. *Journal of Big Data*, *9*(1), 89. [CrossRef]

Ledger Academy. (2025). *Dead coin*. Available online: https://www.ledger.com/academy/glossary/dead-coin (accessed on 21 July 2025). [CrossRef]

Mirza, A. M., Fernando, Y., Mergeresa, F., Wahyuni-Td, I. S., Ikhsan, R. B., & Fernando, E. (2023, November 7–8). *Psychological risk, security risk and perceived risk of the cryptocurrency usage*. 2023 IEEE 9th International Conference on Computing, Engineering and Design (ICCED) (pp. 1–5), Kuala Lumpur, Malaysia. https://doi.org/10.1109/ICCED60214.2023.10425190.

Naik, D., & Jaidhar, C. (2022). A novel multi-layer attention framework for visual description prediction using bidirectional LSTM. *Journal of Big Data*, *9*, 6. [CrossRef]

Nakamoto, S. (2008). *Bitcoin: A peer-to-peer electronic cash system*. Available online: https://ssrn.com/abstract=3440802 (accessed on 21 July 2025).

Özuysal, H., Atan, M., & Güvenir, H. A. (2022). Kripto para birimlerinin ölme riskinin tahmini. *Gazi İktisat ve İşletme Dergisi*, *8*(3), 547–564. [CrossRef]

Patel, M. M., Tanwar, S., Gupta, R., & Kumar, N. (2020). A deep learning-based cryptocurrency price prediction scheme for financial institutions. *Journal of Information Security and Applications*, *55*, 102583. [CrossRef]

Reiff, N. (2024). *The collapse of FTX: What went wrong with the crypto exchange?* Investopedia. Available online: https://www.investopedia.com/what-went-wrong-with-ftx-6828447#toc-the-bottom-line (accessed on 21 July 2025). [CrossRef]

Rosen, A. (2025, May 22). *Cryptocurrency basics: Pros, cons and how it works*. NerdWallet. Available online: https://www.nerdwallet.com/article/investing/cryptocurrency (accessed on 21 July 2025). [CrossRef]

Royal, J. (2025, August 19). *The 3 biggest Bitcoin crashes in history—And how to spot the next one before it happens*. Available online: https://www.bankrate.com/investing/biggest-bitcoin-crashes-in-history/ (accessed on 17 November 2025).

Sakinoğlu, B., & Güvenir, A. (2023, July 23–25). *Predicting the risk of death of cryptocurrencies*. 2023 IEEE International Conference on Omni-layer Intelligent Systems (COINS) (pp. 1–6), Berlin, Germany. [CrossRef]

Seabe, P. L., Moutsinga, C. R. B., & Pindza, E. (2023). Forecasting cryptocurrency prices using LSTM, GRU, and bi-directional LSTM: A deep learning approach. *Fractal and Fractional*, *7*(2), 203. [CrossRef]

Sivadasan, E. T., Mohana Sundaram, N., & Santhosh, R. (2024). Stock market forecasting using deep learning with long short-term memory and gated recurrent unit. *Soft Computing*, *28*, 3267–3282. [CrossRef]

Tang, Y., Song, Z., Zhu, Y., Yuan, H., Hou, M., Ji, J., Tang, C., & Li, J. (2022). A survey on machine learning models for financial time series forecasting. *Neurocomputing*, *512*, 363–380. [CrossRef]

Tessoni, V., & Amoretti, M. (2022). Advanced statistical and machine learning methods for multi-step multivariate time series forecasting in predictive maintenance. *Procedia Computer Science*, *200*(C), 748–757. [CrossRef]

Tiao, G. C. (2025). Time series: ARIMA methods. What drives crypto prices? In J. D. Wright (Ed.), *International encyclopedia of the social & behavioral sciences* (2nd ed., pp. 316–321). Elsevier. [CrossRef]

Wang, W., Lyu, G., Shi, Y., & Liang, X. (2018, November 23–25). *Time series clustering based on dynamic time warping*. 2018 IEEE 9th International Conference on Software Engineering and Service Science (ICSESS) (pp. 487–490), Beijing, China. [CrossRef]

Disclaimer/Publisher's Note: The statements, opinions and data contained in all publications are solely those of the individual author(s) and contributor(s) and not of MDPI and/or the editor(s). MDPI and/or the editor(s) disclaim responsibility for any injury to people or property resulting from any ideas, methods, instructions or products referred to in the content.